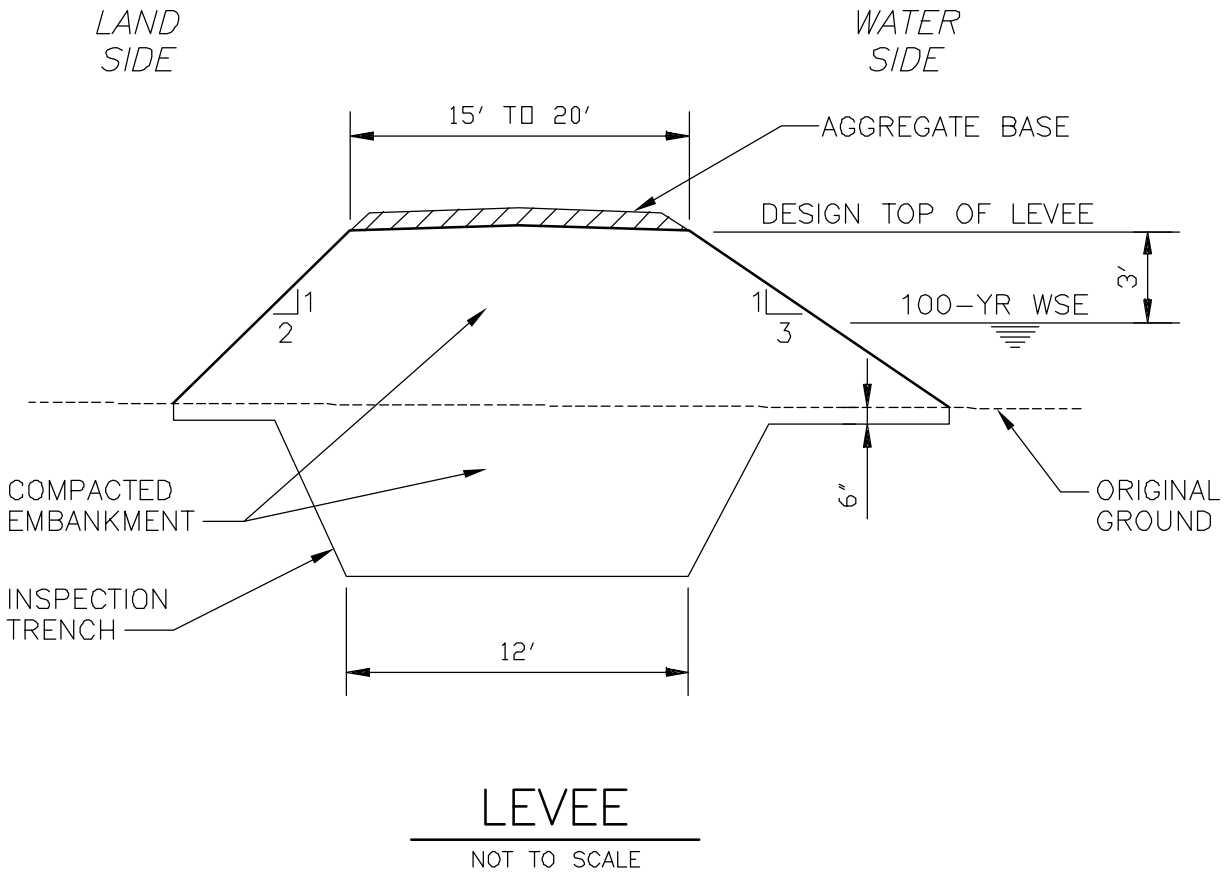

Figure 3-3
TYPICAL LEVEE SECTION