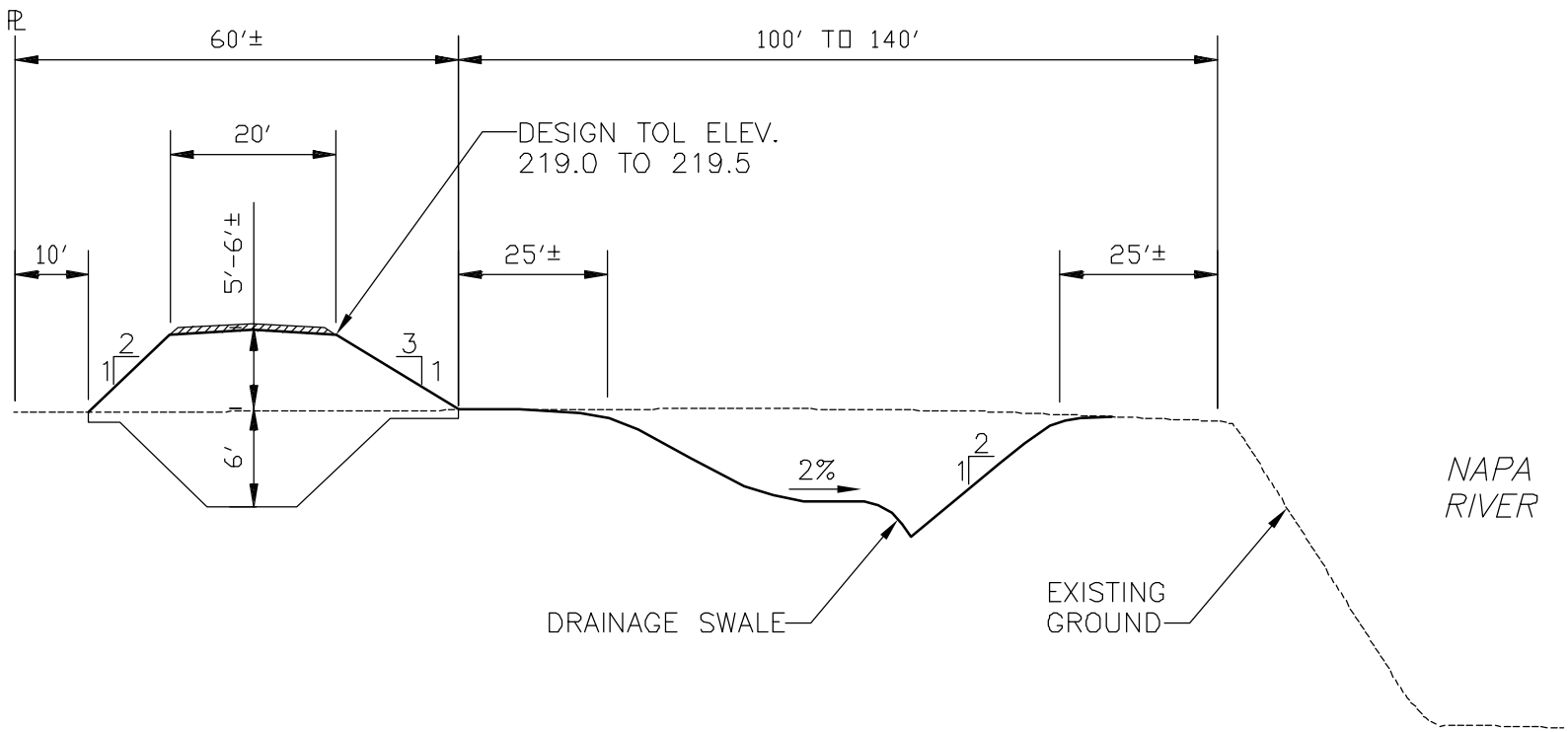

TERRACE "B" AND LEVEE

NOT TO SCALE

Figure 3–5
TYPICAL SECTION TERRACE "B" AND LEVEE
(South of Adams St to Vineyard Valley)