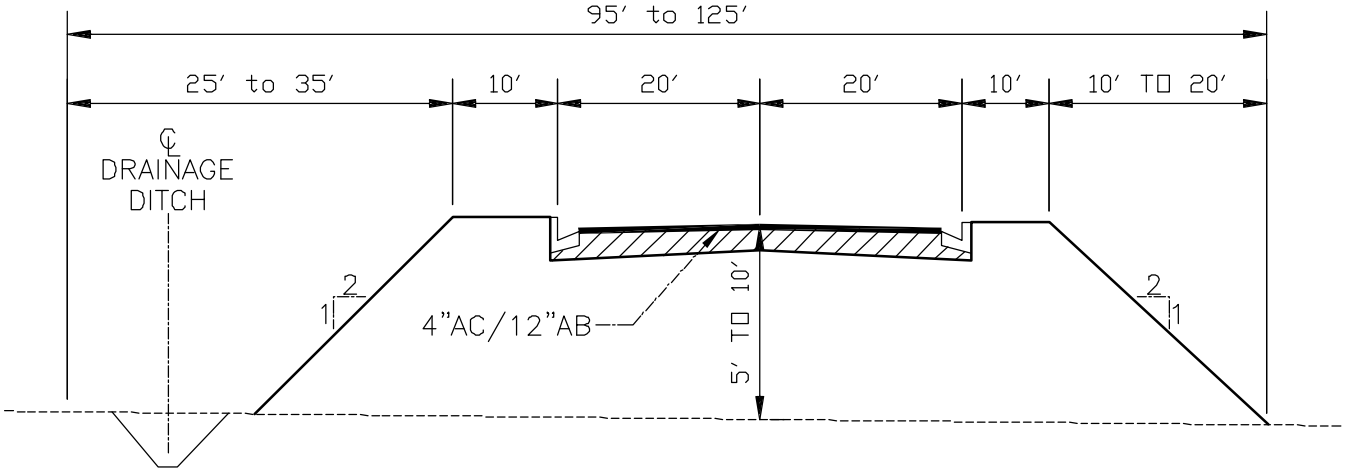

ADAMS ST. EXTENSION

NOT TO SCALE

Figure 3–7
TYPICAL SECTION ADAMS STREET EXTENSION
(Station 10+00 to 28+00)