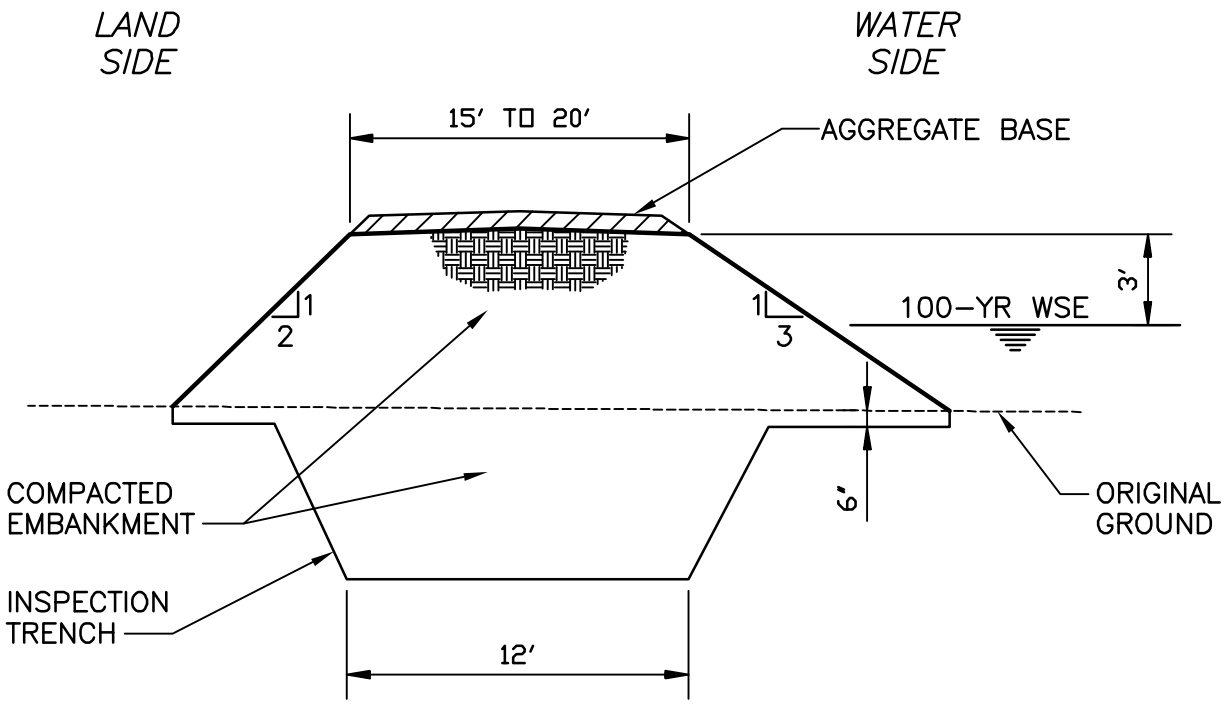

ST. HELENA COMPREHENSIVE FLOOD PROTECTION PROJECT

TYPICAL LEVEE SECTION

DECEMBER 2002

FIGURE 3-4