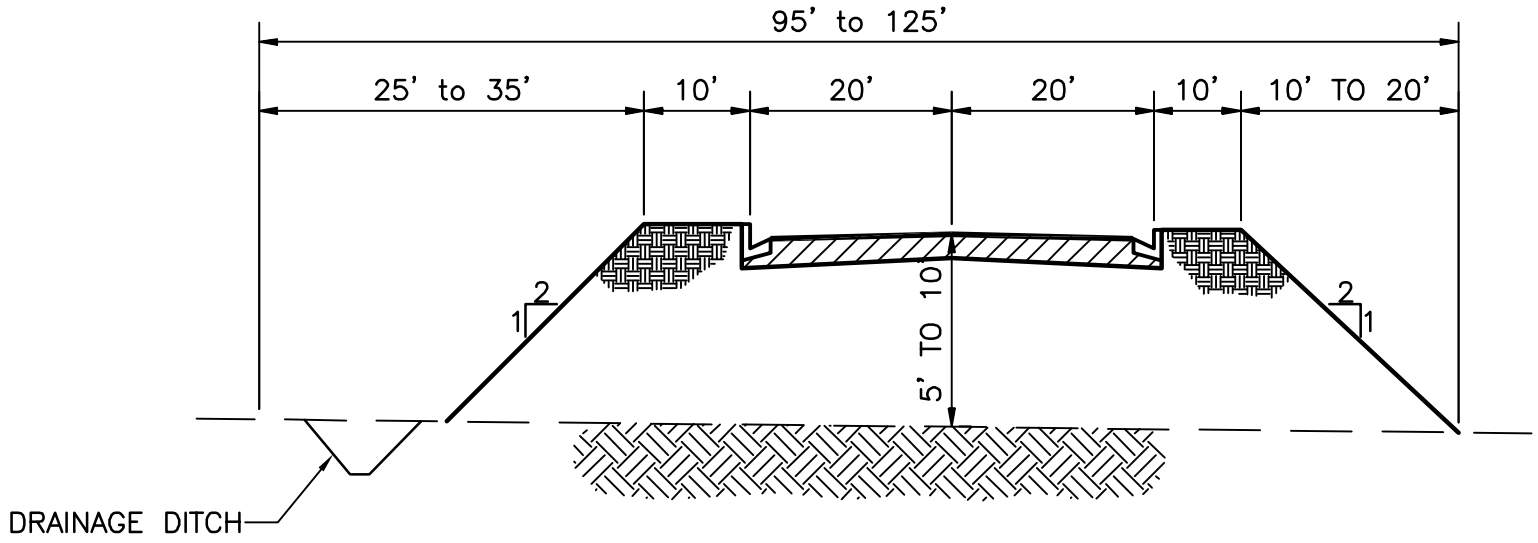

ST. HELENA COMPREHENSIVE
FLOOD PROTECTION PROJECT

ADAMS STREET EXTENSION TYPICAL SECTION

DECEMBER 2002

FIGURE 3–6